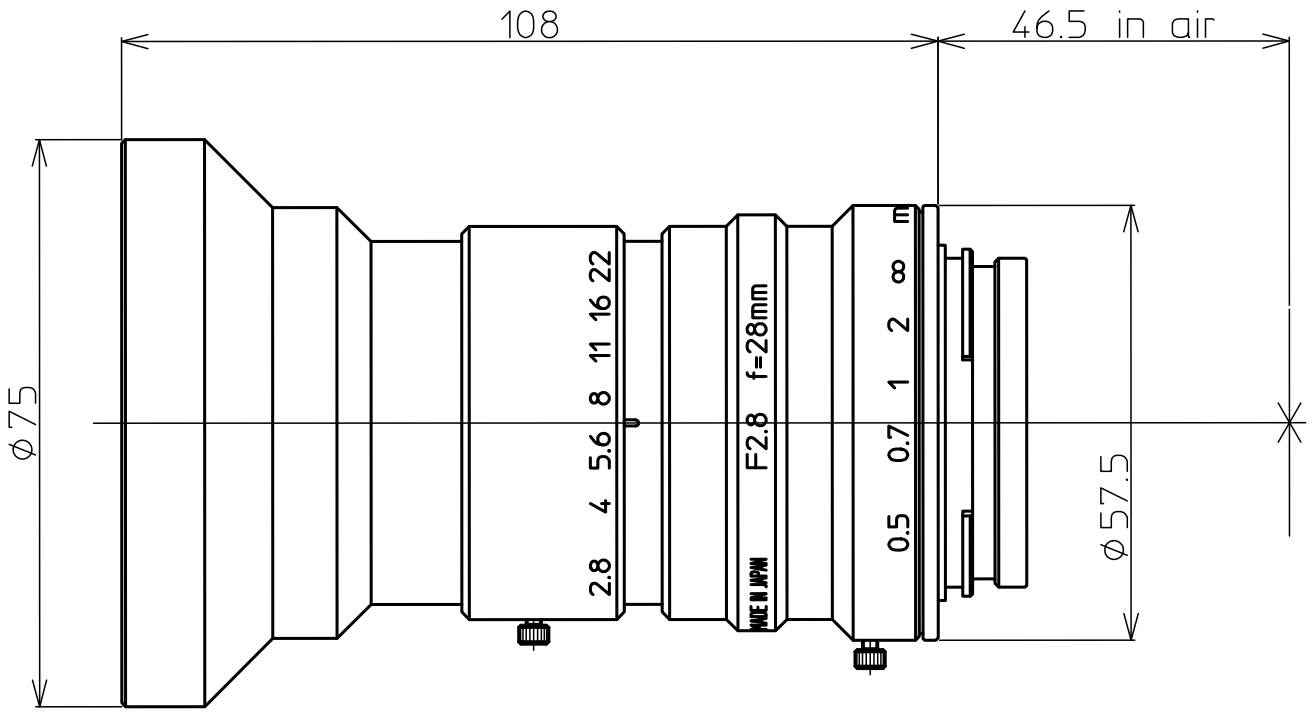

COLOR 3CCD LINE SENSOR LENS	
FOCAL LENGTH	f=28mm
MAX. DIAMETER (RATIO)	F:2.8
IRIS RANGE	F2.8~F16
SENSOR SIZE	30mm
MINIMUM FOCUS DISTANCE	0.5m
FLANGE BACK	46.5 mm in air
FILTER SCREW SIZE	M72×0.75
FRONT/REAR EFFECTIVE DIA.	F:φ63.4mm R:φ39.0mm
MOUNT	Nikon-F Mount
WEIGHT	482g

		LM28CLS		
		28mm / F2.8		