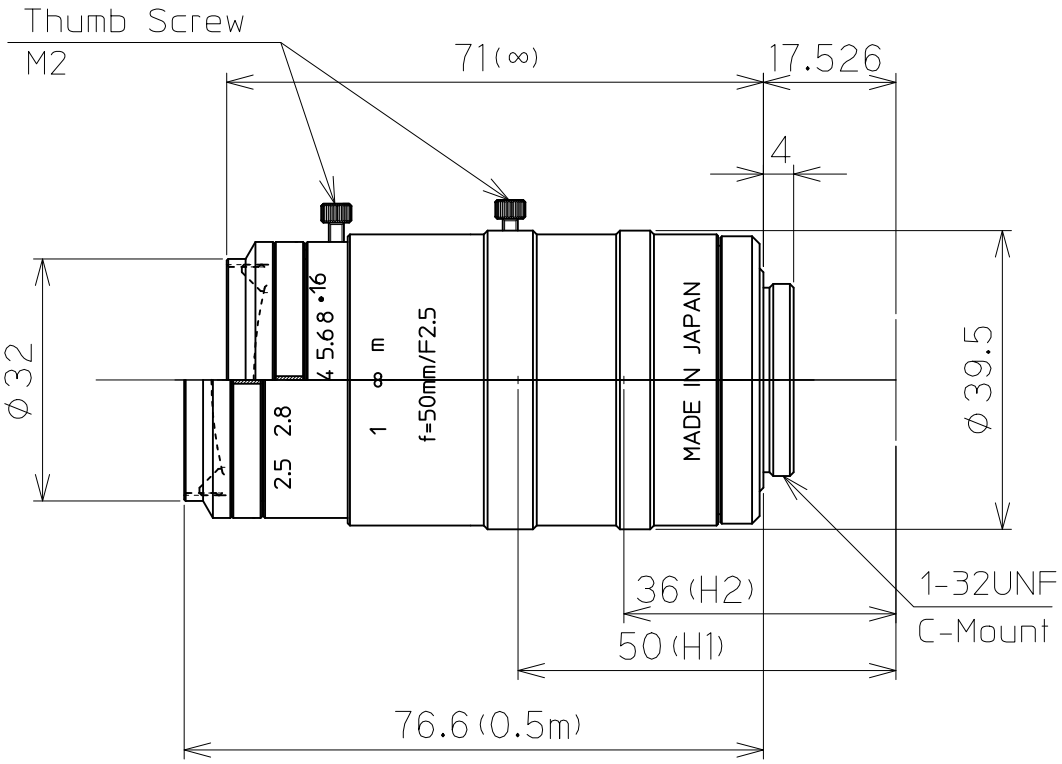

1" 2.5/50mm C		1"	2/3"	1/1.8"
FOCAL LENGTH		f=50mm		
F-NUMBER		F=2.5-16		
PICTURE SIZE		9.6x12.8mm	6.6x8.8mm	5.4x7.2mm
ANGLE OF VIEW (∞)	VER. ANGLE	11.0°	7.6°	6.2°
	HOR. ANGLE	14.6°	10.0°	8.2°
	DIA. ANGLE	18.2°	12.6°	10.3°
DISTORTION (TV)		-0.11%	-0.06%	-0.04%
FIELD OF VIEW (MINIMUM FOCUS DISTANCE)	VER.	95mm	66mm	54mm
	HOR.	127mm	87mm	71mm
	DIA.	159mm	109mm	89mm
MINIMUM FOCUS DISTANCE		0.5m		
FLANGE BACK		17.526mm in air		
BACK FOCUS		34.9mm in air		
FILTER SCREW SIZE		M30.5x0.5		
FRONT/REAR EFFECTIVE DIA.		FRONT φ23.1mm REAR φ17.7mm		
MOUNT		C-MOUNT		
EXIT PUPIL		-115.2mm		
TEMPERATURE RANGE		-10~+50°C		
STORAGE TEMPERATURE RANGE		-20~+60°C		
RESOLUTION CENTER/CORNER		CENTER 160lp/mm CORNER 100lp/mm		
WEIGHT		153g		

NOTE:Specifications and availability are subject to change without notice

		NMV-50M1-VIS-SWIR
		1" f=50mm F2.5 VIS-SWIR
2020.09.15		NAVITAR
2020.09.14		